AVR -- SL015B3

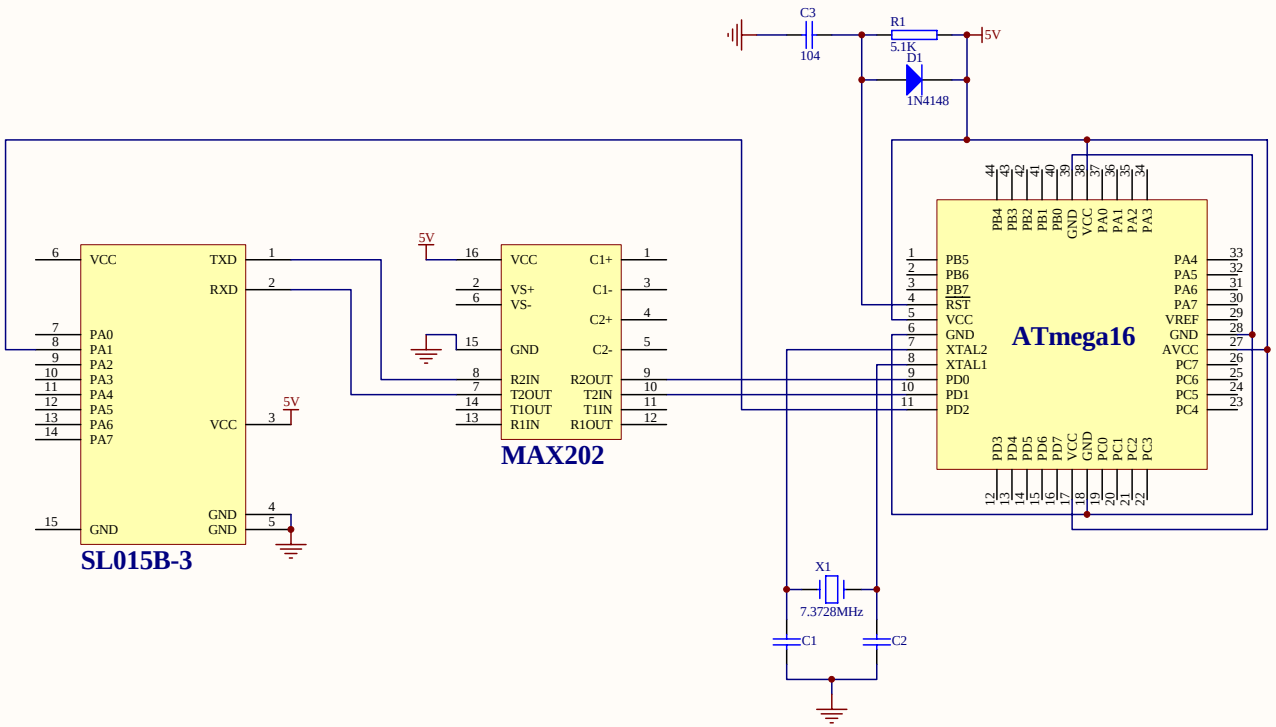
C3
104
R1
5.1K
5V
D1
1N4148
SL015B-3
VCC
TXD
RXD
PA0
PA1
PA2
PA3
PA4
PA5
PA6
PA7
VCC
GND
GND
GND
MAX202
VCC
VS+
VS-
GND
R2IN
T2OUT
T1OUT
R1IN
C1+
C1-
C2+
C2-
R2OUT
T2IN
T1IN
R1OUT
ATmega16
PB5
PB6
PB7
RST
VCC
GND
XTAL2
XTAL1
PD0
PD1
PD2
PA4
PA5
PA6
PA7
VREF
GND
AVCC
PC7
PC6
PC5
PC4
PB4
PB3
PB2
PB1
PB0
GND
VCC
PA0
PA1
PA2
PA3
PD3
PD4
PD5
PD6
PD7
VCC
GND
PC0
PC1
PC2
PC3
X1
7.3728MHz
C1
C2